Lab Report 3: Node Analysis Methods

1. Nodal Analysis and Circuit Verification

The method of calculating the node voltages and branch currents in the circuit was found using nodal analysis. Nodal analysis works by creating a KCL equation for each non-reference node (a node that doesn't have a ground connection) and writing the currents in terms of the voltage differences of the different nodes and dividing it by any resistors, effectively applying ohm's law on each resistor-voltage drop. A system of equations is created to find the difference in electric potential of one node to ground.

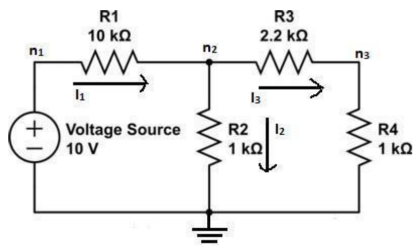

Figure 3.1

The circuit being analyzed

The theoretical results were calculated by hand and simulated in Circuit Lab

For the hand calculated results:

a. $I_1 = 929\,\mu\text{A}, I_2 = 708\,\mu\text{A}, I_3 = 221\,\mu\text{A}$
b. $n_1 = 10\,\text{V}, n_2 = 708\,\text{mV}, n_3 = V_4 = n_2\left(\frac{1\,\text{k}\Omega}{3.2\,\text{k}\Omega}\right) = 221\,\text{mV}$

For the Circuit Lab Results:

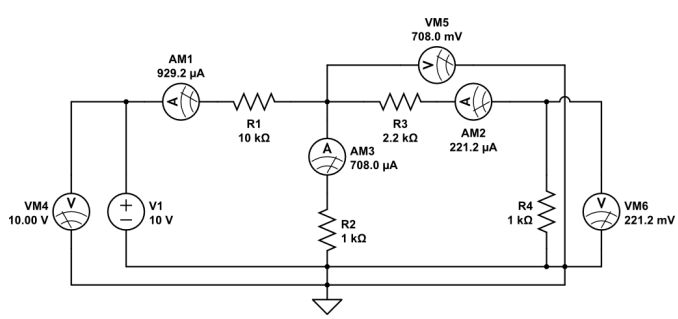

The results for the experiment are in the table below

n_1	$10.1\ \mathrm{V}$
n_2	$0.7245\ \mathrm{V}$
n_3	$0.229\ \mathrm{V}$
I_1	$0.9442\ \mathrm{mA}$
I_2	$0.7044\ \mathrm{mA}$
I_3	$0.2213\ \mathrm{mA}$

The results closely match to the theoretical values. Discrepancy in values are due to resistor tolerances.

2. Effect of Reversing Current Direction

For the current dependent voltage source only hand calculations were made. i is found to be negative due to the direction of it:

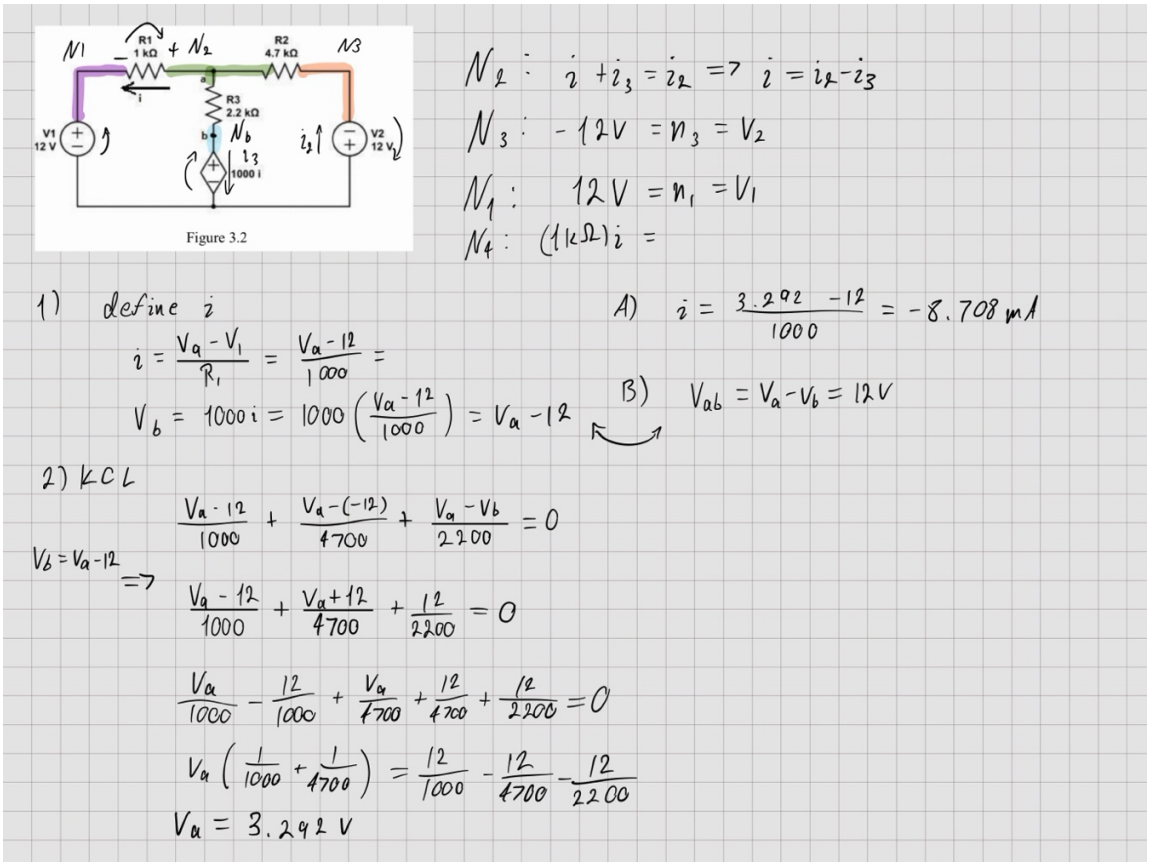

A measure of $i_{experimental} = -6.48\ \mathrm{mA}$ was made when shorting the CCVS. And $i_{experimental} = -4.6\ \mathrm{mA}$ after adding the CCVS without adjusting it.

These calculations closely match the experimental data

With the original direction of i, the measured current was $i_{experiment} = -8.88\ \mathrm{mA}$

The CCVS was found to be $1000 i_{experimental} = 8.9\ \mathrm{V}$

Discrepancies in the measurement could be due to resistor tolerances.

Reversing the direction of i returns the same magnitude of i but positive:

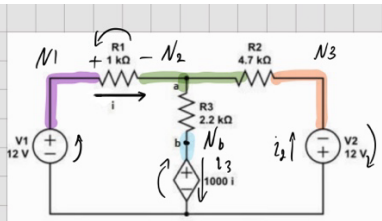

Figure 3.2

1) $i = \frac{V_1 - V_a}{R_1} = \frac{12 - V_a}{1000}$

$V_b = 1000\,i = 1000\left(\frac{V_a - 12}{1000}\right) = V_a - 12$

N_2 : $i + i_2 = i_3 \Rightarrow i = i_3 - i_2$

N_3 : $-12V = n_3 = V_2$

N_1 : $12V = n_1 = V_1$

N_4 : $(1k\Omega)i =$

2) KCL

$\frac{V_a - 12}{1000} + \frac{V_a - (-12)}{4700} + \frac{V_a - V_b}{2200} = 0$

$V_b = V_a - 12 \Rightarrow$

$\frac{V_a - 12}{1000} + \frac{V_a + 12}{4700} + \frac{12}{2200} = 0$

$\frac{V_a}{1000} - \frac{12}{1000} + \frac{V_a}{4700} + \frac{12}{4700} + \frac{12}{2200} = 0$

$V_a\left(\frac{1}{1000} + \frac{1}{4700}\right) = \frac{12}{1000} - \frac{12}{4700} - \frac{12}{2200}$

$V_a = 3.292\ V$

$\boxed{i = \frac{12 - 3.292}{1000} = 8.708\,mA}$

Reversing i only changes the sign of the result. This was proven in the experiment with $i_{experimental} = 8.88\ \mathrm{mA}$

The physical interpretation is that the polarity of the wires was flipped and made the ammeter detect a positive current flow while the amount of current remains the same. The interpretation of the result is that current is actually flowing in this configuration through the circuit.

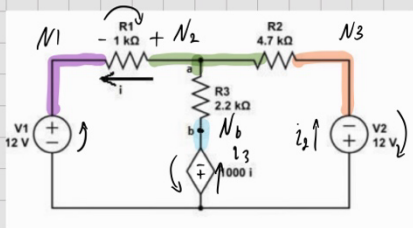

Figure 3.2

$N_2: \quad i_2 + i_3 = i$

$N_3: \quad -12V = n_3 = V_2$

$N_1: \quad 12V = n_1 = V_1$

$N_4: \quad (-1k\Omega)\, i$

1) define i

$$i = \frac{V_a - V_1}{R_1} = \frac{V_a - 12}{1000} =$$

$$V_b = -1000\, i = -1000\left(\frac{V_a - 12}{1000}\right) = 12 - V_a$$

2) KCL

$$\frac{V_a - 12}{1000} + \frac{V_a - (-12)}{4700} + \frac{V_a - V_b}{2200} = 0$$

$V_b = 12 - V_a$

$\Rightarrow$

$$\frac{V_a - 12}{1000} + \frac{V_a + 12}{4700} + \frac{2V_a - 12}{2200} = 0$$

$$\frac{V_a}{1000} - \frac{12}{1000} + \frac{V_a}{4700} + \frac{12}{4700} - \frac{12}{2200} + \frac{2V_a}{2200} = 0$$

$$V_a\left(\frac{1}{1000} + \frac{1}{4700} + \frac{2}{2200}\right) = \frac{12}{1000} - \frac{12}{4700} + \frac{12}{2200}$$

$$V_a = 7.023$$

(3) A) $i = \dfrac{7.023 - 12}{1000} = -4.98\,mA \approx -5\,mA$

B) $V_{ab} = V_a - V_b = 12V$

When we keep the original direction of i, but flip the polarity of the current-dependent voltage source $1000i$ we get $i \approx -5\ \mathrm{mA}$

This matched with our experimental data. $i_{experimental} = -5\ \mathrm{mA}$ and $1000 i_{experimental} = 5\ \mathrm{V}$